Oxford Cambridge and RSA

Thursday 12 November 2020 – Afternoon

GCSE (9–1) Design and Technology

J310/01 Principles of Design and Technology

Time allowed: 2 hours

You must have:
- the Insert (inside this document)

You can use:
- a scientific calculator
- a ruler (cm/mm)
- geometrical instruments

Please write clearly in black ink. **Do not write in the barcodes.**

Centre number | | | | | | Candidate number | | | | |

First name(s) _____

Last name _____

INSTRUCTIONS
- Use black ink. You can use an HB pencil, but only for graphs and diagrams.
- Write your answer to each question in the space provided. If you need extra space use the lined pages at the end of this booklet. The question numbers must be clearly shown.
- Answer **all** the questions.
- Use the Insert to answer the questions in Section B.
- Where appropriate, your answer should be supported with working. Marks might be given for using a correct method, even if your answer is wrong.

INFORMATION
- The total mark for this paper is **100**.
- The marks for each question are shown in brackets **[ ]**.
- Quality of extended response will be assessed in questions marked with an asterisk (*).
- This document has **24** pages.

ADVICE
- Read each question carefully before you start your answer.

© OCR 2020 [603/0663/4]
DC (LK/SW) 197780/6
OCR is an exempt Charity

SECTION A

Answer **all** the questions.

1 **Fig. 1** shows a pair of trainers.

Fig. 1

(a) The trainer upper is made from a synthetic fabric.

(i) Name **one** synthetic fabric.

..... **[1]**

(ii) Give **two** characteristic properties of synthetic fabric that make it a suitable material for the trainer upper.

1 .....

.....

2 .....

.....

[2]

© OCR 2020

(b) Trainer designers often consider using new and emerging technologies when designing trainer uppers and soles.

Explain **two** benefits to designers of using new and emerging technologies in the design of trainers.

1 .....

.....

.....

2 .....

.....

.....
[4]

(c) Trainers are a popular choice of footwear.

Explain **one** reason why trainers are popular with consumers.

.....

.....

..... **[2]**

(d) The soles of the trainers shown in **Fig. 1** are made from a polymer material.

Explain **one** reason why a polymer material is suitable for the soles of trainers.

.....

..... **[1]**

(e) Many large companies manufacture their products overseas.

Give **two** reasons why a company might manufacture products overseas.

1 .....

2 .....
[2]

© OCR 2020

(f) When products are manufactured overseas there can be social and ethical issues.

Explain **two** social or ethical issues that manufacturers should consider.

1 .....

.....

.....

.....

2 .....

.....

.....

.....

[4]

© OCR 2020

2 **Fig. 2** shows a shelving unit made from timber. It has two side frames and four shelves.

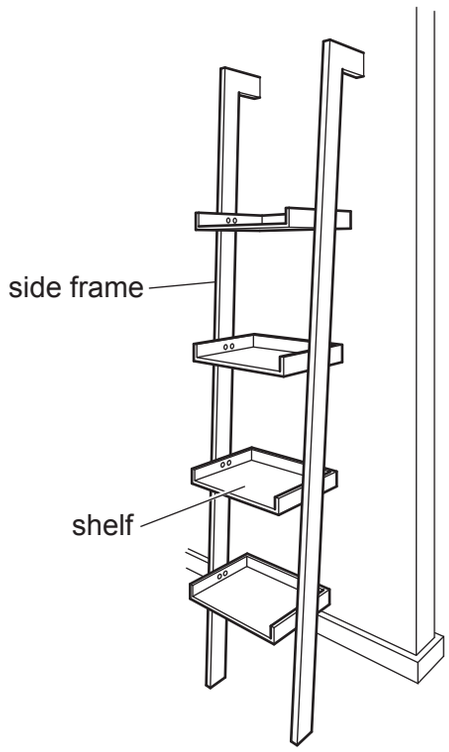

Fig. 2

(a) **Fig. 3** shows a simplified side view of the frame of the shelving unit when it is fixed to a wall.

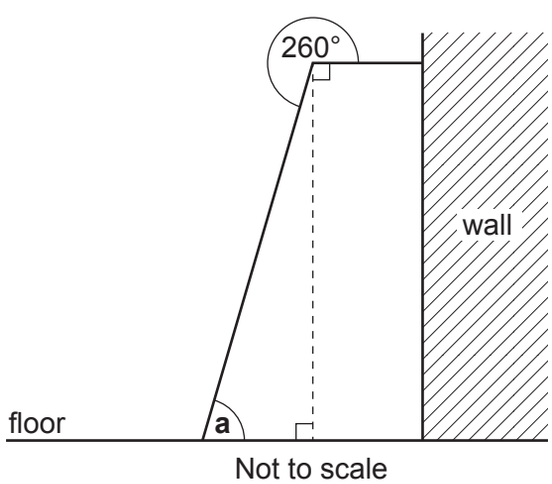

Fig. 3

Calculate angle **a**.

Angle **a** = ... ° **[2]**

© OCR 2020

(b) Each side frame is made from two pieces of timber, the top and the upright, as shown in **Fig. 4**.

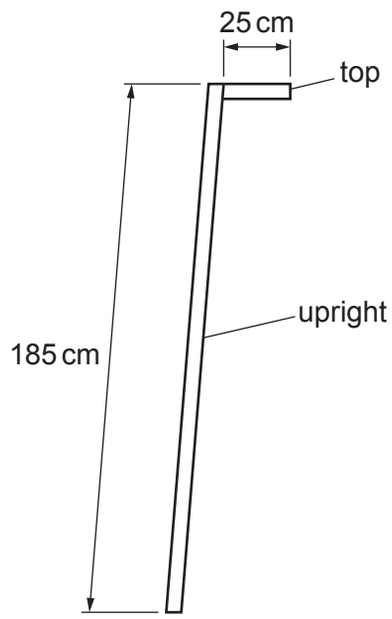

Fig. 4

(i) Using the dimensions in **Fig. 4** convert the lengths of the top and the upright from centimetres to metres.

Length of top = ... m

Length of upright = ... m
[1]

(ii) A manufacturer has an order for ten shelving units.

The timber needed to make the side frames for the shelving units is available in standard sized 2 m lengths.

Calculate how many 2 m lengths of timber are needed to manufacture the side frames required for **ten** shelving units.

Number of 2 m lengths required = ... **[4]**

© OCR 2020

(c) The shelves shown in **Fig. 5** are made from manufactured board.

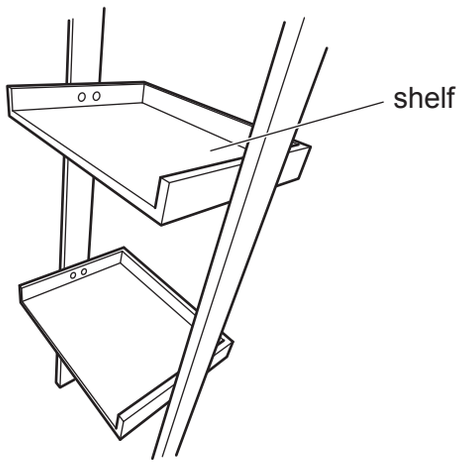

Fig. 5

(i) Name **one** manufactured board.

..... **[1]**

(ii) Give **one** benefit of using manufactured board compared to natural timbers.

.....

..... **[1]**

(d) The materials needed to make **one** shelving unit cost £18.40.

The manufacturer adds 40% to the cost of materials to cover labour costs.

Calculate the total cost of **one** manufactured shelving unit.

Total cost = £ ..... **[2]**

© OCR 2020

(e) Complete the working drawing on the grid opposite to show the front and side views of the shelving unit shown in **Fig. 6**.

The shelf is made from 2 cm thick manufactured board.

The grid points are 1 cm apart. Use the scale 1:10. **[4]**

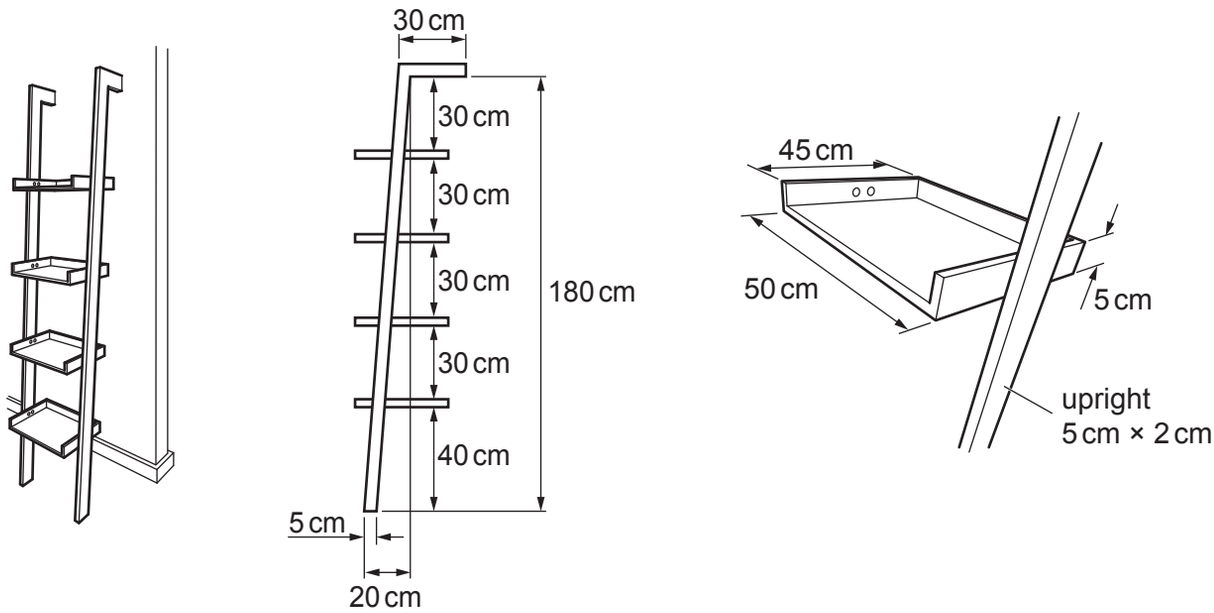

Fig. 6

© OCR 2020

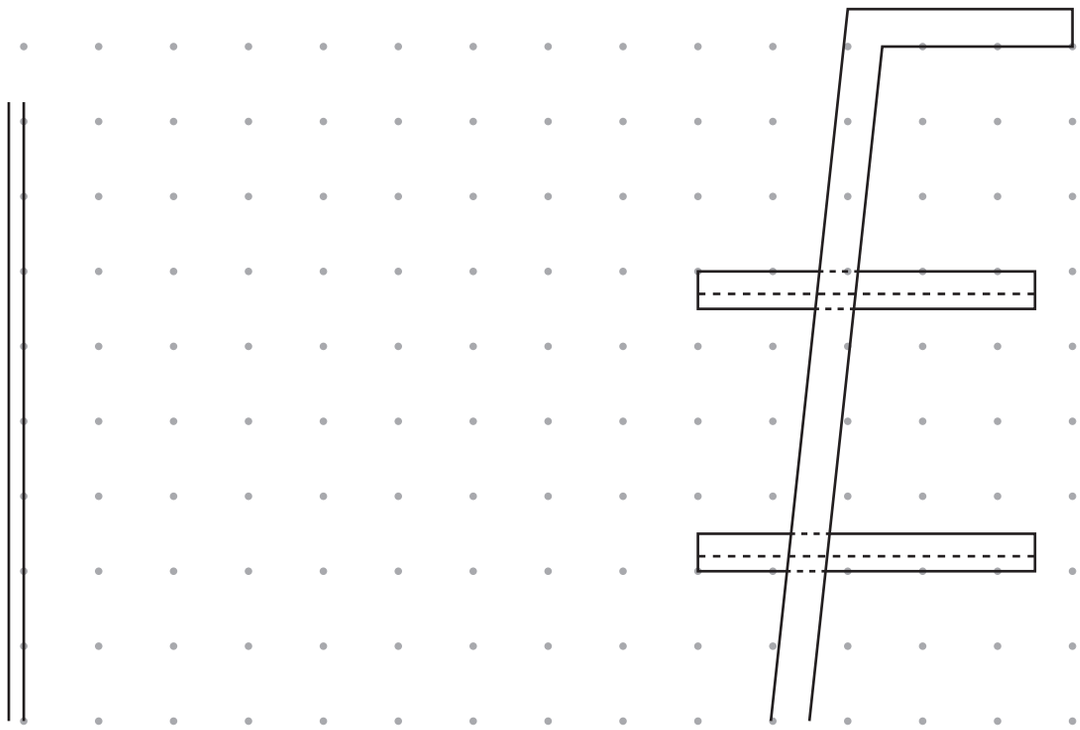

FRONT VIEW SIDE VIEW

Scale 1:10

© OCR 2020

3 **Fig. 7** shows a bicycle suitable for use on and off road.

Fig. 7

(a) In the table below, state the type of motion that takes place for each description.

Description of motion	Type of motion
The bicycle wheels turn around.	
The bicycle moves along the road in a straight line.	

[2]

(b) **Fig. 8** shows part of the gear system the bicycle uses.

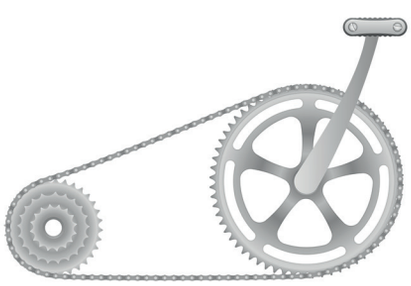

Fig. 8

Explain **one** reason why gears are used on bicycles.

.....

.....

..... **[2]**

© OCR 2020

(c) **(i)** **Fig. 9** shows a simple gear train.

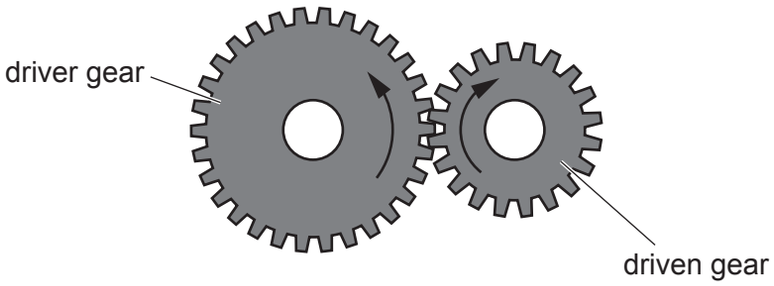

Fig. 9

State what effect increasing the size of the driver gear will have on the driven gear.

..... **[1]**

(ii) **Fig. 10** shows a different gear train.

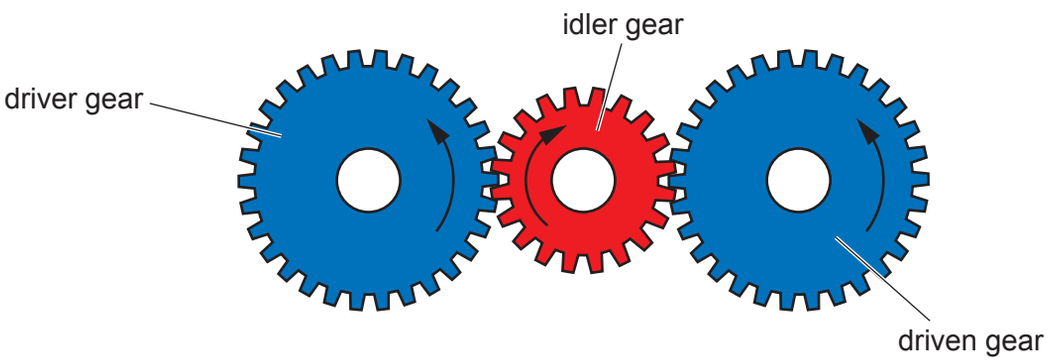

Fig. 10

Look at **Fig. 10** and describe the main function of an idler gear.

.....

..... **[1]**

(d) The seat and handlebars of the bicycle shown in **Fig. 7** are adjustable.

Explain **one** benefit of this adjustability to the user.

.....

.....

..... **[2]**

© OCR 2020

(e) The table below shows the most suitable bicycle size based on people's height.

Height in centimetres (cm)	**Bicycle size**
148 cm – 151 cm	XX-Small
152 cm – 159 cm	X-Small
160 cm – 167 cm	Small
168 cm – 174 cm	Medium
175 cm – 182 cm	Large
183 cm – 190 cm	X-Large
191 cm – 198 cm	XX-Large

There are 12 inches in one foot (ft) and 2.54 cm in one inch.

Calculate the most suitable bicycle size for a person whose height is 5 ft 10 inches.

Show your working.

Most suitable bicycle size ..... **[3]**

(f) Products such as the bicycle need to have structural strength.

Identify **two** methods that designers use to ensure the structural strength of a product.

1 .....

2 .....
[2]

(g) Bicycle frames are often made from alloys or composite materials.

(i) Explain what an alloy is.

.....

.....

..... **[2]**

(ii) Give **one** example of a composite material.

..... **[1]**

© OCR 2020

(h)* Discuss the importance of considering renewable sources of energy when designing and manufacturing products.

Use examples to support your answer.

.....

.....

.....

.....

.....

.....

.....

.....

.....

.....

.....

.....

.....

.....

.....

.....

.....

.....

.....

.....

.....

.....

.....

.....

..... **[8]**

© OCR 2020

SECTION B

Answer **all** the questions.

For **all** questions in Section B you **must** refer to the **Insert** which contains images and information about products you could find in a gym.

4 Refer to **page 8** of the Insert.

(a) **Images A** and **B** show a smart watch which can be used to monitor your heart rate.

(i) Give **two** reasons why smart watches are increasingly popular with consumers.

1 .....

.....

2 .....

.....
[2]

(ii) The strap of the smart watch is made from a thermo polymer.

Name a thermo polymer.

..... **[1]**

(b) A designer wants to create a smart watch aimed at the elderly market.

Give **two** methods of research the designer could carry out to make sure the product is successful for this user group.

1 .....

2 .....
[2]

(c) **Image C** shows the packaging for a pair of trainers made from cardboard.

(i) Give **two** properties of cardboard that make it suitable for use in the manufacture of packaging.

1 .....

.....

2 .....

.....
[2]

© OCR 2020

(ii) There is a need for packaging to be more sustainable.

Explain, using an example, how designers are creating more environmentally friendly packaging.

.....

.....

.....

..... **[3]**

Turn over for the next question

© OCR 2020

You need to answer questions **5** and **6** in relation to **one** of the products listed below covering an area you have studied in depth.

Information about the products is contained in the **Insert**.

Before you choose a product, read all parts of questions 5 and 6.

You **must** tick **one** box below to indicate your chosen product.

- ☐ **Product 1:** Point of sale display (papers and boards)
- ☐ **Product 2:** Leggings (fibres and fabrics)
- ☐ **Product 3:** Weights machine (design engineering)
- ☐ **Product 4:** Step block (polymers)
- ☐ **Product 5:** Dumbbell (metals)
- ☐ **Product 6:** Locker (timbers)

© OCR 2020

5 Study and use the images and information about your chosen product given in the Insert.

(a) **(i)** Identify the scale of production that could be used to manufacture your chosen product **commercially**.

Scale of production .....

Explain why this scale of production is suitable for your chosen product.

.....

.....

..... **[3]**

(ii) For the scale of production you have identified above:

Explain the key manufacturing processes, including the tools and techniques required to manufacture and assemble your chosen product.

.....

.....

.....

.....

.....

.....

.....

.....

.....

.....

.....

.....

.....

.....

.....

.....

..... **[6]**

© OCR 2020

(iii) Describe how jigs, formers or templates would be used to achieve consistency and quality during commercial production of your chosen product, including the use of digital technology if appropriate.

.....

.....

.....

.....

.....

..... **[3]**

© OCR 2020

(b) Raw materials are sourced, extracted and converted into useable forms to manufacture products.

For **one** specific material from your chosen product:

Describe the specific source of the raw material and how it is processed or converted into a useable form.

Name of material: .....

Description: .....

.....

.....

.....

.....

.....

.....

.....

.....

.....

.....

.....

.....

.....

.....

.....

..... **[6]**

© OCR 2020

(c) When designing products for use in a gym environment, ergonomics and anthropometrics must be considered.

(i) Identify **two** ergonomic features of your chosen product.

1 .....

.....

2 .....

.....

[2]

(ii) Give **two** examples of anthropometric data that the designer of your chosen product could have used.

1 .....

2 .....

[2]

© OCR 2020

6 You should use **the same** product you chose for Question 5 to answer this question.

(a) The choice of suitable materials and surface finish for products is important.

Give **two** reasons why the material(s) or surface finish used in your chosen product is suitable for its intended purpose.

1 .....

.....

2 .....

.....
[2]

(b) Describe how either a surface finish or graphics/logo could be applied to your chosen product.

.....

.....

.....

.....

.....

..... **[3]**

Turn over for question 6 (c)*

© OCR 2020

(c)* The marketing and branding of products such as those used in gyms and sporting environments influence consumer decisions.

Discuss why marketing and branding is important in the design of products.

Use examples you are familiar with to support your answer.

.....

.....

.....

.....

.....

.....

.....

.....

.....

.....

.....

.....

.....

.....

.....

.....

.....

.....

.....

..... **[8]**

END OF QUESTION PAPER

© OCR 2020

ADDITIONAL ANSWER SPACE

If additional space is required, you should use the following lined page(s). The question number(s) must be clearly shown in the margin(s).

© OCR 2020

OCR
Oxford Cambridge and RSA

Copyright Information

OCR is committed to seeking permission to reproduce all third-party content that it uses in its assessment materials. OCR has attempted to identify and contact all copyright holders whose work is used in this paper. To avoid the issue of disclosure of answer-related information to candidates, all copyright acknowledgements are reproduced in the OCR Copyright Acknowledgements Booklet. This is produced for each series of examinations and is freely available to download from our public website (www.ocr.org.uk) after the live examination series.

If OCR has unwittingly failed to correctly acknowledge or clear any third-party content in this assessment material, OCR will be happy to correct its mistake at the earliest possible opportunity.

For queries or further information please contact The OCR Copyright Team, The Triangle Building, Shaftesbury Road, Cambridge CB2 8EA.

OCR is part of the Cambridge Assessment Group; Cambridge Assessment is the brand name of University of Cambridge Local Examinations Syndicate (UCLES), which is itself a department of the University of Cambridge.

© OCR 2020